416024 Complete Faucet
With Pop-Up

412924 Complete Faucet
Ultra Low Lead

Ⓐ - **429102** Ceramic Disc Hot Cartridge
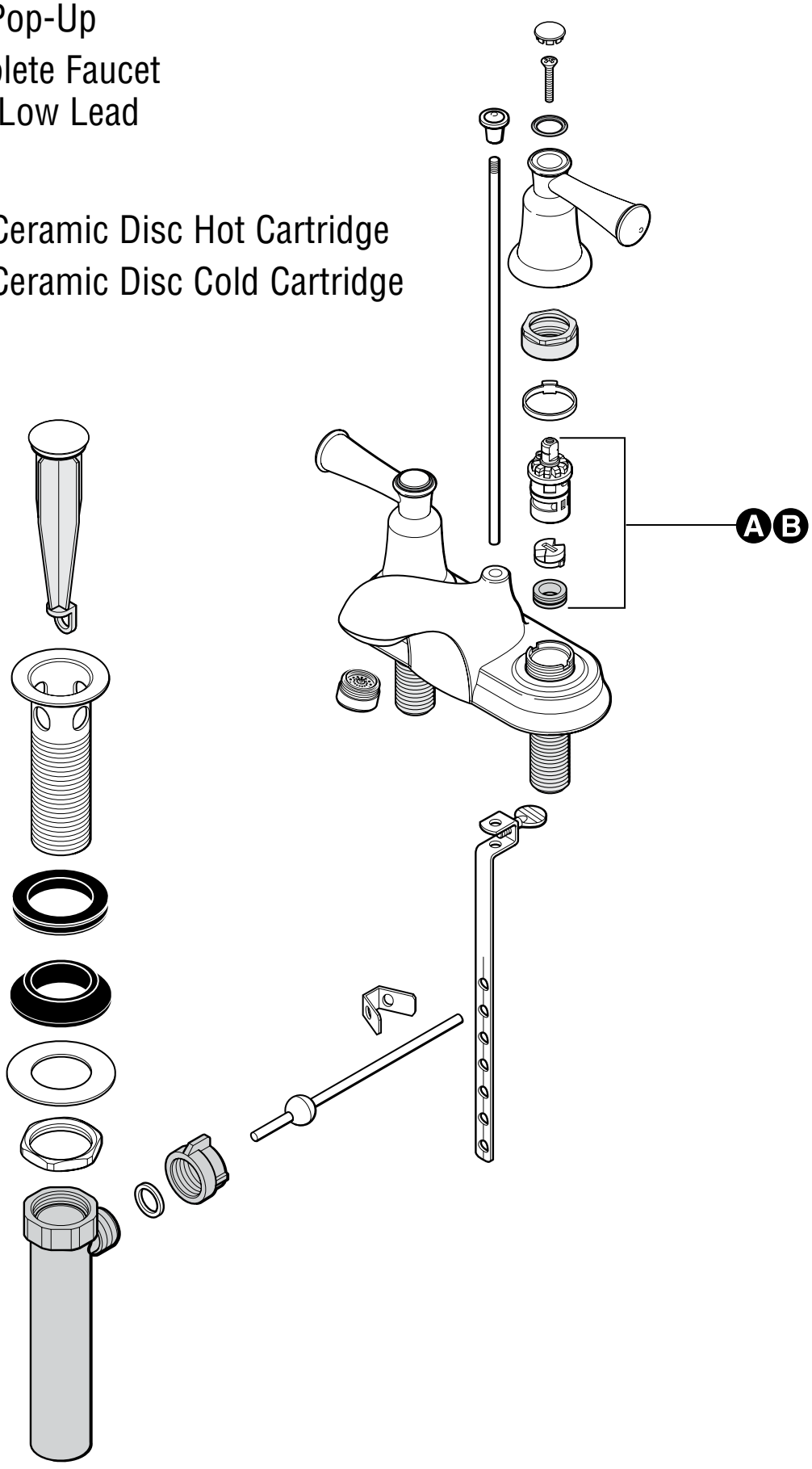
Ⓑ - **429103** Ceramic Disc Cold Cartridge